Model CX140S SPECIFICATIONS

ACTUATION DATA:

VOLTAGE:

Pull in..... 9-15Vdc(12Vdc Nominal)

Drop out..... 1.5Vdc Minimum.

Current..... 80mA @12Vdc 20°C.

Coil Resistance..... 150 OHM ±10% 20°C.

SWITCHING TIME:

Pull in..... 15ms max.

Drop out..... 10ms max.

LIFE EXPECTANCE..... 500,000. Operation min.

MECHANICAL:

Contact arrangement..... SPDT

RF Contacts..... Break before Make.

Operating Temperature..... 50° to 70°C.

Impedance..... 50 Ohms.

Weight..... Approx 95gs.

ELECTRICAL CHARACTERISTICS:

Frequency MHz	VSWR max	Isolation -dB(mini)	Ins,Loss -dB(max)	RF Power W
50	1.03	55	0.08	250
150	1.03	51	0.1	250
500	1.05	47	0.15	200
1000	1.06	34	0.2	150
1500	1.2	28	0.25	100

COIL CHARACTERISTICS:

Nominal Voltages.	Voltage Range	Resistance Ohm 10%
12Vdc	9-15Vdc	150(20°C)

SCALE	UNIT			
/		PART NAME	MATERIAL	TREATMENT

CHECKED BY:

DRAWING BY:

DATE:

TOHTSU®

TOYO TSUSHO CO., LTD.
3670 Mushikake-Machi Tsuchiura-City
Ibaraki-Ken Japan 300
Phone: 0298-24-3000 Telefax: 0298-23-8431

TITLE
Model CX140S

DWG
RP-06520

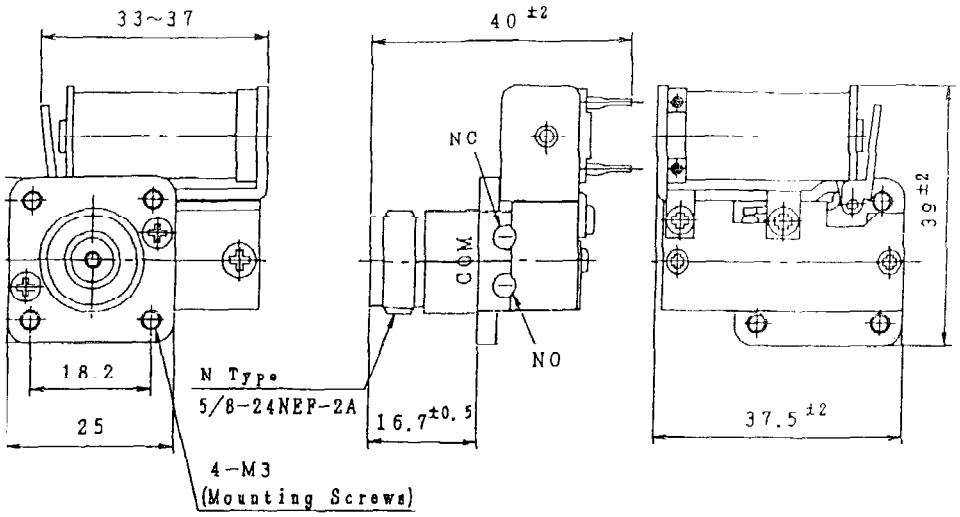

取付穴 (Mounting Holes)

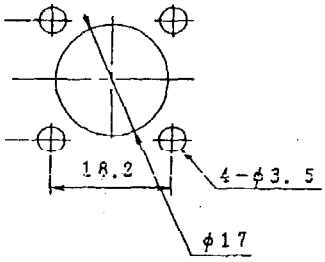

Schematic

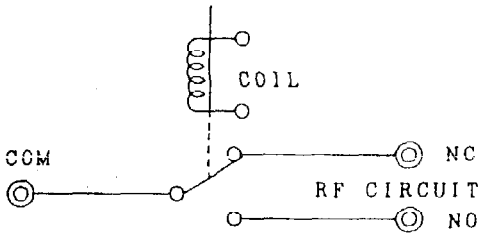

l cable the terminal disposition

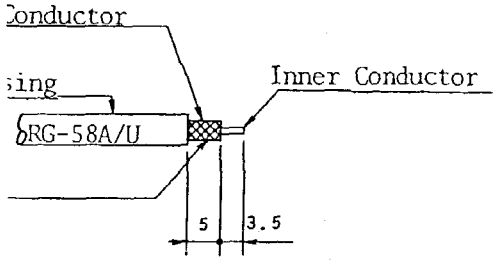

UNIT			
mm	PART NAME	MATERIAL	TREATMENT

BY: